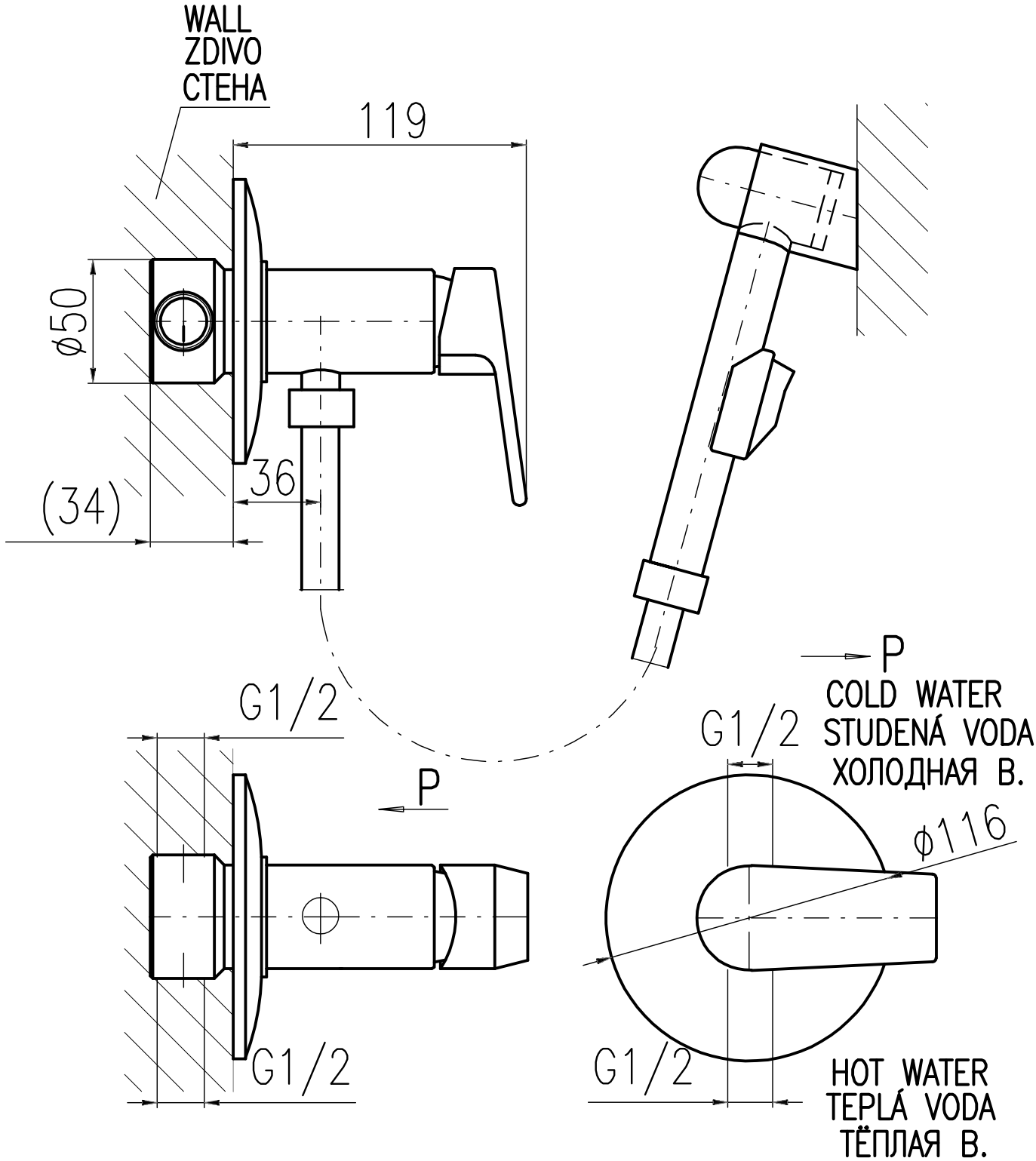
WALL
ZDIVO
CTEHA
119
ϕ50
36
(34)
P
COLD WATER
STUDENÁ VODA
ХОЛОДНАЯ В.
G1/2
G1/2
P
ϕ116
G1/2
G1/2
HOT WATER
TEPLÁ VODA
ТЁПЛАЯ В.