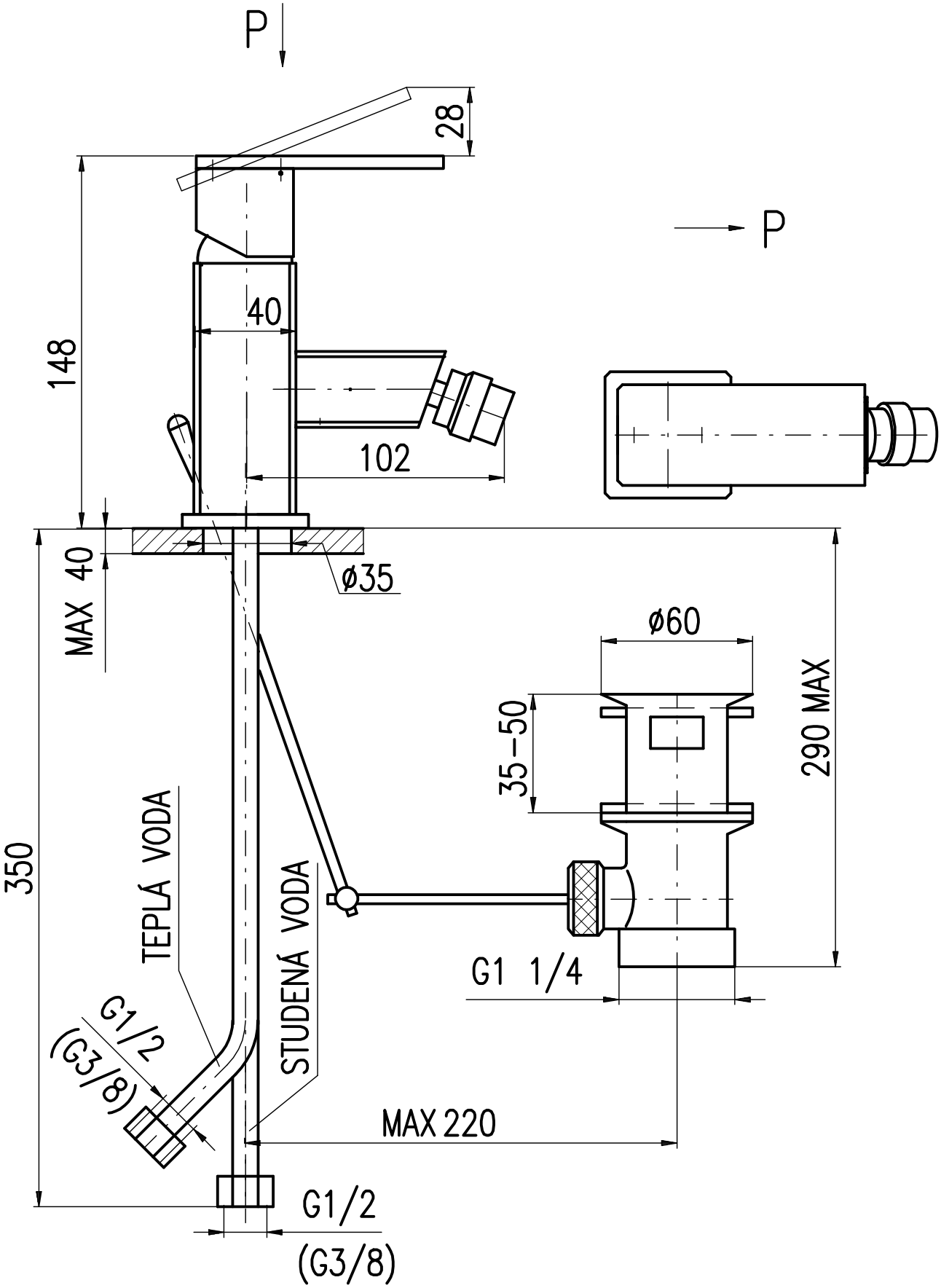
P
28
P
40
148
102
MAX 40
ø35
ø60
35–50
290 MAX
350
TEPLÁ VODA
STUDENÁ VODA
G1 1/4
G1/2
(G3/8)
MAX 220
G1/2
(G3/8)